Link-Belt

EXCAVATORS • FORESTRY
DEMOLITION • MATERIAL HANDLING

80 Spin Ace Interim Tier 4

specifications

Engine

Isuzu AU-4LE2X water cooled, 4-cycle diesel, 4 cylinder in-line, direct injection, 133 CID (2 179 cc), 3.35" (85 mm) bore x 3.78" (96 mm) stroke.

SAE net horsepower..... 54 HP (40 kW) @ 2,000 rpm
Maximum torque ..... 155 lbf-ft. (210 N-m) @ 1,500 rpm
Starter 24V-3.2kW
Alternator ..... 50 amp
Battery ..... 64 amp-hours

Cab and Controls

Cab with a/c and heat with defrost, analog gauge package, illuminated softtouch switches, low-effort controls, control pattern changer, blade control, one-touch idle, safety glass windows, intermittent windshield wiper with washer, polycarbonate roof hatch, sun visor, shockless cab suspension with four fluid mountings, KAB® reclining suspension seat, AM/FM radio, dome light, seat belt, cup holder, storage compartments, floor mat, footrests, cigarette lighter, ashtray, 12-volt outlet, travel alarm, handrail, mirrors. Common key locks, tool box, 70W work light, non-skid surface pads, handrail.

A/C output..... 13,490 BTU/hr
Heater output..... 12,900 BTU/hr
Sound level (inside cab) ..... 75.0 dB(A)
Sound level (exterior) ..... 96.0 dB(A)

Hydraulic System

Open-center system, two variable displacement axial piston pumps and one gear pump for pilot controls, main control valve with one 4-spool valve and one 5-spool valve with auxiliary spool, one 2-spool valve for blade and boom swing, oil cooler, boom and arm holding valves, attachment cushion, o-ring face seals, 6 micron return filter.

Hydraulic Pumps

Maximum flow ..... 2 x 18.0 gpm (2 x 68 l/min)
Pilot pump maximum flow ..... 5.7 gpm (21.4 l/min)
Blade pump maximum flow ..... 6.4 gpm (24.2 l/min)

Relief Valve Settings

Boom/arm/bucket..... 4,260 psi (294 bar)
Swing circuit ..... 3,280 psi (226 bar)
Travel circuit ..... 4,260 psi (294 bar)
Pilot pump working circuit pressure..... 610 psi (42 bar)
Blade pump working circuit pressure..... 3,280 psi (226 bar)

Hydraulic Cylinders

number of cylinders – bore x rod x stroke

Boom ..... 2 - 4.3″ x 2.8″ x 35.9″ (110 mm x 70 mm x 911 mm)
Arm ..... 1 - 3.7″ x 2.4″ x 31.4″ (95 mm x 60 mm x 797 mm)
Bucket ..... 1 - 3.3″ x 2.2″ x 26.2″ (85 mm x 55 mm x 665 mm)
Blade ..... 1 - 3.9″ x 2.4″ x 7.1″ (100 mm x 60 mm x 180 mm)
Swing Boom ..... 1 - 3.7″ x 2.2″ x 25.2″ (95 mm x 55 mm x 640 mm)

Hydraulic Oil Filtration

Return filter..... 6 micron
Pilot filter..... 8 micron
Suction screen..... 150 micron

Swing

Fixed-displacement, axial piston swing motor, planetary gear reduction. Mechanical disc brake and ball bearing with internal gear for turntable.

Swing speed..... 0 – 9.5 rpm
Tail swing..... 5′ 5″ (1.66 m)
Swing torque ..... 12,520 lbf-ft. (17.0 kN•m)

Undercarriage

X Pattern carbody with 9′ 4″ (2.85m) undercarriage by 6′ 6″ (1.99m) track gauge, sealed and strutted track chain, sealed rollers and idlers, two-speed independent hydrostatic travel with compact planetary final drive, disc type brakes, adjustable track tension, swivel guard, 7′ 7″ (2.32m) hydraulically controlled dozer blade.

Carrier rollers..... 1 per side
Track rollers..... 5 per side
Track link pitch..... 6.06″ (154 mm)
Shoes ..... 39 per side
Shoe width..... 17.7″ (450 mm)
Ground pressure ..... 5.51 psi (0.38 Bar)

Lubricant and Coolant Capacity

Fuel tank..... 26.42 gallons (100.0 Liters)
Hydraulic tank..... 13.21 gallons (50.0 Liters)
Hydraulic system..... 25.70 gallons (97.3 Liters)
Final drive (per side)..... 0.29 gallons (1.1 Liters)
Engine oil..... 2.38 gallons (9.0 Liters)
Cooling system..... 2.69 gallons (10.2 Liters)

Travel System

Variable-displacement axial piston travel motor, planetary gear reduction final drive, spring-applied hydraulic release disc brake.

Max. travel speed ..... 2.1 - 3.2 mph (3.3 - 5.1 km/h)
Drawbar pull ..... 13,040 lbf (58 kN))
Gradeability ..... 70% (35°)

Attachment

Boom ..... 11′ 6″ (3.50 m)

Available Arms (Excavator)	Digging Force*
• 5′ 7″ (1.71m)	8,610 lbf (38 kN)
• 6′ 11″ (2.12m)	7,644 lbf (34 kN)
Bucket Digging Force	12,790 lbf (56.9 kN)

*Digging force ratings are based on ISO 6015, "Earthmoving Machinery – Hydraulic Excavators – Tool Forces."

Fuel Usage*

Heavy ..... 1.67 gal / hr (6.32 liter / hr)
Average ..... 1.46 gal / hr (5.53 liter / hr)
Light..... 1.15 gal / hr (4.35 liter / hr)

*Fuel economy varies widely depending on application. "Heavy" represents nearly continuous operation in tough digging applications in SP Mode. "Light" represents easy digging applications utilizing the machine about 50% of the time in SP Mode.

Operating Weight

Swing Boom Excavator - Working weight with 17.7″ (450mm) shoes, 11′ 6″ (3.87 m) boom, 5′ 7″ (1.71m) arm, 460lb (210kg) bucket, 2,727lb (1,237kg) counterweight ..... 18,585 lbs. (8 430 kg)

LBX
"Different by Design"

80 Spin Ace® Interim Tier 4 Specifications

Working Ranges

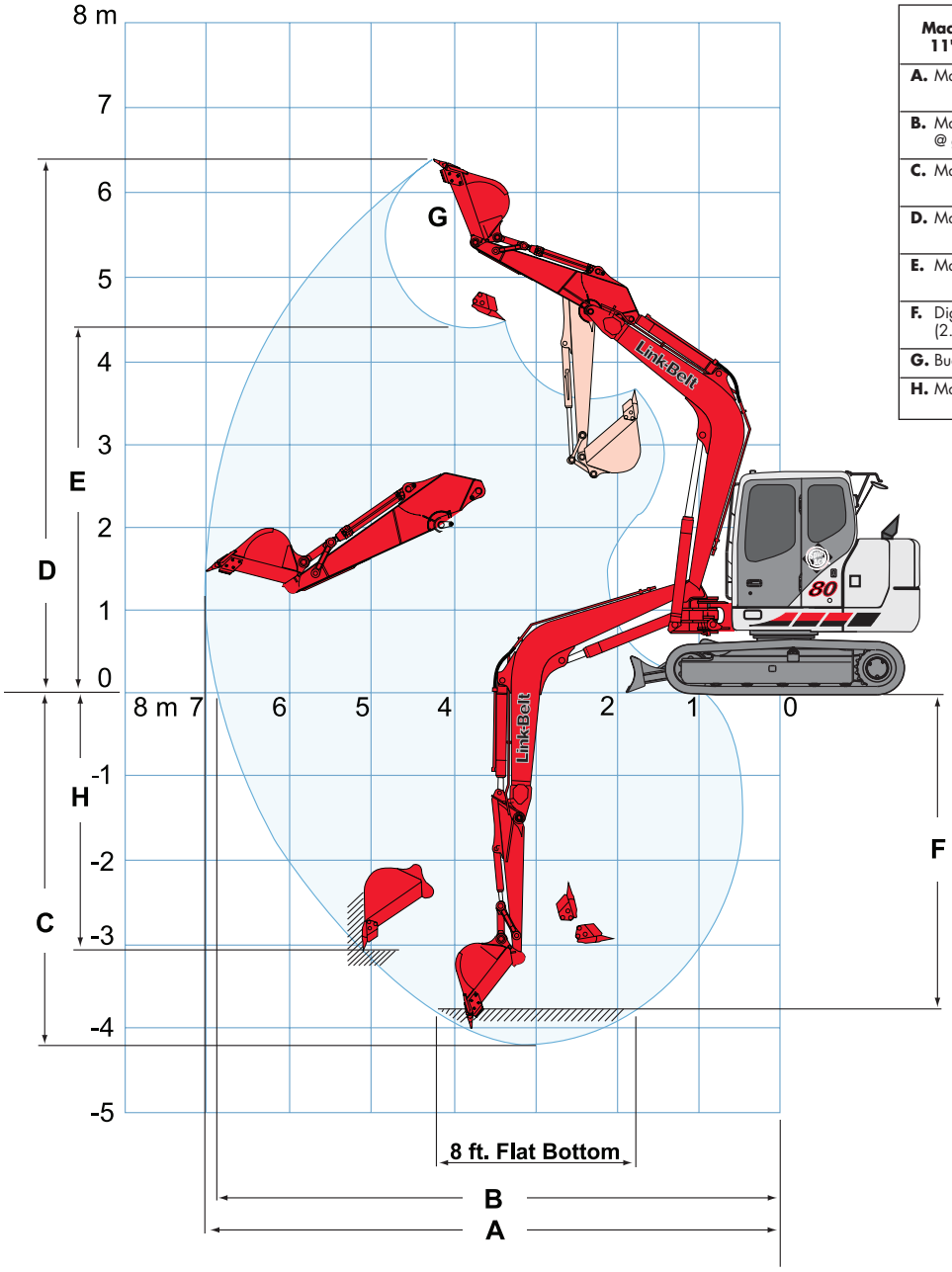

Machine equipped with 11' 6" (3.50 m) boom	5' 7" Arm (1.71 m)	6' 11" Arm (2.12 m)
A. Max. digging radius	23' 1" (7.03 m)	24' 3" (7.40 m)
B. Max. digging radius @ ground level	22' 7" (6.89 m)	23' 10" (7.27 m)
C. Max. digging depth	13' 9" (4.18 m)	15' 1" (4.59 m)
D. Max. digging height	21' 0" (6.39 m)	21' 8" (6.60 m)
E. Max. dumping height	14' 5" (4.39 m)	15' 1" (4.60 m)
F. Digging depth – 8' (2.44 m) level bottom	12' 5" (3.78 m)	13' 11" (4.23 m)
G. Bucket wrist angle	177°	177°
H. Max. vertical wall depth	10' 1" (3.08 m)	11' 8" (3.55 m)

Bucket Sizes

80 Spin® Ace Swing Boom

Bucket Type	Capacity	Width Outside Lip	Weight	# Teeth	Arm Length Mono 5' 7" (1.71 m)	Arm Length Mono 6' 11" (2.12 m)
ESCO STDP	.24 yd³ (.18 m³)	18" (457 mm)	403 lb. (183 kg)	3	H	H
	.35 yd³ (.27 m³)	24" (610 mm)	473 lb. (215 kg)	4	H	H
	.45 yd³ (.34 m³)	30" (762 mm)	542 lb. (246 kg)	5	H	M
ESCO DITCH	.61 yd³ (.47 m³)	42" (1 067 mm)	596 lb. (270 kg)	0	L	L
	.71 yd³ (.54 m³)	48" (1 219 mm)	645 lb. (293 kg)	0	L	N/A
POWER	.24 yd³ (.18 m³)	18" (457 mm)	644 lb. (292 kg)	3	H	H
	.34 yd³ (.26 m³)	24" (610 mm)	728 lb. (330 kg)	4	H	H
	.45 yd³ (.34 m³)	30" (762 mm)	812 lb. (368 kg)	4	M	M
	.55 yd³ (.42 m³)	36" (914 mm)	897 lb. (407 kg)	5	L	L
	.65 yd³ (.50 m³)	42" (1 067 mm)	981 lb. (445 kg)	6	L	N/A

Approval Code For Arm/Bucket Combinations:

H - Heavy material (up to 3,370 lbs./ yd³)
M - Medium material (up to 2,700 lbs./ yd³)
L - Light material (up to 2,020 lbs./ yd³)
N/A - Not applicable

Lifting Capacities 80 Spin® Ace Swing Boom

5' 7" (1.71 m) Arm (Blade off Ground)

11' 6" (3.50 m) Boom and 460 lb. (208 kg) Bucket

Bucket Hook Height		Radius of Load									
		5' 0" (1.52 m)		10' 0" (3.05 m)		15' 0" (4.57 m)		20' 0" (6.10 m)		Cap. at Max. Reach	
		End	Side	End	Side	End	Side	End	Side	End	Side
+15' 0" (4.57 m)	**lbs.**					**2,900***	**2,900***			**2,800**	**2,500**
	kg					1 315*	1 315*			1 270	1 134
+10' 0" (3.05 m)	**lbs.**					**3,550***	**3,550***			**2,200**	**2,000**
	kg					1 610*	1 610*			998	907
+5' 0" (1.52 m)	**lbs.**			**7,350**	**6,450**	**3,900**	**3,500**	**2,450**	**2,200**	**2,050**	**1,850**
	kg			3 334	2 926	1 769	1 588	1 111	998	930	839
Ground Line	**lbs.**			**6,850**	**6,000**	**3,650**	**3,300**	**2350**	**2100**	**2,150**	**1,900**
	kg			3 107	2 722	1 656	1 497	1 066	953	975	862
-5' 0" (1.52 m)	**lbs.**	**7,400***	**7,400***	**6,900**	**6,050**	**3,600**	**3,200**			**2,650**	**2,400**
	kg	3 357*	3 357*	3 130	2 744	1 633	1 451			1 202	1 089
-10' 0" (3.05 m)	**lbs.**			**7,100**	**6,200**						
	kg			3 221	2 812						

5' 7" (1.71 m) Arm (Blade on Ground)

11' 6" (3.50 m) Boom and 460 lb. (208 kg) Bucket

Bucket Hook Height		Radius of Load							
		10' 0" (3.05 m)		15' 0" (4.57 m)		20' 0" (6.10 m)		Cap. at Max. Reach	
		End	Side	End	Side	End	Side	End	Side
+15' 0" (4.57 m)	**lbs.**			**2,900***	**2,900***			**3,000***	**2,500**
	kg			1 315*	1 315*			1 361*	1 134
+10' 0" (3.05 m)	**lbs.**			**3,550***	**3,550***			**3,150***	**2,000**
	kg			1 610*	1 610*			1 429*	907
+5' 0" (1.52 m)	**lbs.**	**8,950***	**6,450**	**5,050***	**3,500**	**4,050***	**2,200**	**3,400***	**1,850**
	kg	4 060*	2 926	2 291*	1 588	1 837*	998	1 542*	839
Ground Line	**lbs.**	**9,150***	**6,000**	**6,450***	**3,300**	**4,500***	**2,100**	**4,050***	**1,900**
	kg	4 150*	2 722	2 926*	1 497	2 041*	953	1 837*	862
-5' 0" (1.52 m)	**lbs.**	**12,100***	**6,050**	**6,800***	**3,200**			**4,700***	**2,400**
	kg	5 488*	2 744	3 084*	1 451			2 132*	1 089
-10' 0" (3.05 m)	**lbs.**	**9,900***	**6,200**						
	kg	4 491*	2 812						

6' 11" (2.12 m) Arm (Blade off Ground)

11' 6" (3.50 m) Boom and 460 lb. (208 kg) Bucket

Bucket Hook Height		Radius of Load									
		5' 0" (1.52 m)		10' 0" (3.05 m)		15' 0" (4.57 m)		20' 0" (6.10 m)		Cap. at Max. Reach	
		End	Side	End	Side	End	Side	End	Side	End	Side
+15' 0" (4.57 m)	**lbs.**									**2,500**	**2,250**
	kg									1 134	1 021
+10' 0" (3.05 m)	**lbs.**					**2,900***	**2,900***	**2,550**	**2,300**	**2,000**	**1,800**
	kg					1 315*	1 315*	1 157	1 043	907	816
+5' 0" (1.52 m)	**lbs.**			**7,300***	**6,600**	**3,950**	**3,500**	**2,450**	**2,200**	**1,850**	**1,650**
	kg			3 311*	2 994	1 792	1 588	1 111	998	839	748
Ground Line	**lbs.**			**6,850**	**6,000**	**3,650**	**3,250**	**2,350**	**2,100**	**1,950**	**1,750**
	kg			3 107	2 722	1 656	1 474	1 066	953	885	794
-5' 0" (1.52 m)	**lbs.**	**6,600***	**6,600***	**6,800**	**5,900**	**3,550**	**3,150**	**2,300**	**2,050**	**2,350**	**2,100**
	kg	2 994*	2 994*	3 084	2 676	1 610	1 429	1 043	930	1 066	953
-10' 0" (3.05 m)	**lbs.**	**11,550***	**11,550***	**6,950**	**6,050**	**3,600**	**3,250**				
	kg	5 239*	5 239*	3 152	2 744	1 633	1 474				

6′ 11″ (2.12 m) Arm (Blade on Ground)

11′ 6″ (3.50 m) Boom and 460 lb. (208 kg) Bucket

Bucket Hook Height		Radius of Load							
		10' 0" (3.05 m)		15' 0" (4.57 m)		20' 0" (6.10 m)		Cap. at Max. Reach	
		End	Side	End	Side	End	Side	End	Side
+15' 0" (4.57 m)	**lbs.**							**2,700***	**2,250**
	kg							1 225*	1 021
+10' 0" (3.05 m)	**lbs.**			**2,900***	**2,900***	**3,200***	**2,300**	**2,800***	**1,800**
	kg			1 315*	1 315*	1 451*	1 043	1 270*	816
+5' 0" (1.52 m)	**lbs.**	**7,300***	**6,600**	**4,500***	**3,500**	**3,700***	**2,200**	**3,050***	**1,650**
	kg	3 311	2 994	2 041*	1 588	1 678*	998	1 383*	748
Ground Line	**lbs.**	**9,800***	**6,000**	**6,100***	**3,250**	**4,350***	**2,100**	**3,550***	**1,750**
	kg	4 445	2 722	2 767*	1 474	1 973*	953	1 610*	794
-5' 0" (1.52 m)	**lbs.**	**12,200***	**5,900**	**6,750***	**3,150**	**4,500***	**2,050**	**4,350***	**2,100**
	kg	5 534	2 676	3 062*	1 429	2 041*	930	1 973*	953
-10' 0" (3.05 m)	**lbs.**	**10,800***	**6,050**	**6,050***	**3,250**				
	kg	4 899	2 744	2 744*	1 474				

Notes: Excavator lifting capacities

1. Lifting capacities shown should not be exceeded. Weight of all lifting accessories must be deducted from the above lifting capacities.
2. Lifting capacities are based on machine standing on firm, uniform supporting surface. User must make allowances for job conditions such as soft or uneven ground.
3. Lifting capacities shown do not exceed 75% of minimum tipping loads or 87% of hydraulic capacities. Capacities marked with an asterisk (*) are limited by hydraulic capacities.
4. Least stable position is over the side.
5. Operator should be fully acquainted with the Operator's Manual & Operating Safety Booklet, furnished by LBX before operating the machine.
6. Capacities apply only to the machine as originally manufactured and normally equipped by LBX Company LLC.
7. Lift capacity ratings are based on SAE J/ISO 10567, "Earthmoving Machinery – Hydraulic Excavators – Lift Capacity".

80 Spin Ace® Interim Tier 4 Specifications

Travel Dimensions

Dimensions - w/5' 7" (1.71 m) arm

A.	Overall Length	21' 10" (6.65 m)
B.	Overall Width	7' 7" (2.32 m)
C.	Overall Height	8' 10" (2.70 m)
D.	Distance Between Idler and Sprocket	7' 3" (2.21 m)
E.	Overall Length of Crawler	9' 4" (2.85 m)
E1.	Overall Length of Crawler and Blade	10′ 9″ (3.28 m)
F.	Track Gauge	6' 2" (1.87 m)
G.	Minimum Ground Clearance	1' 2" (360 mm)
H.	Shoe Width	17.7" (450 mm)
I.	Overall Crawler Width (w/standard shoes)	7' 7" (2.32 m)
J.	Blade Height	17.7" (450 mm)
K.	Blade Dig Depth	8" (205 mm)
L.	Blade Raise Height	16.3" (415 mm)
M.	Overall Width of Upper	7' 4" (2.23 m)
N.	Boom Transport Height	7' 8" (2.33 m)
	Swing Radius	Right - 50°, Left - 80°

Dimensions - w/6' 11" (2.12 m) arm

A.	Overall Length	22' 1" (6.74 m)
B.	Overall Width	7' 7" (2.32 m)
C.	Overall Height	8' 10" (2.70 m)
N.	Boom Transport Height	8' 8" (2.65 m)

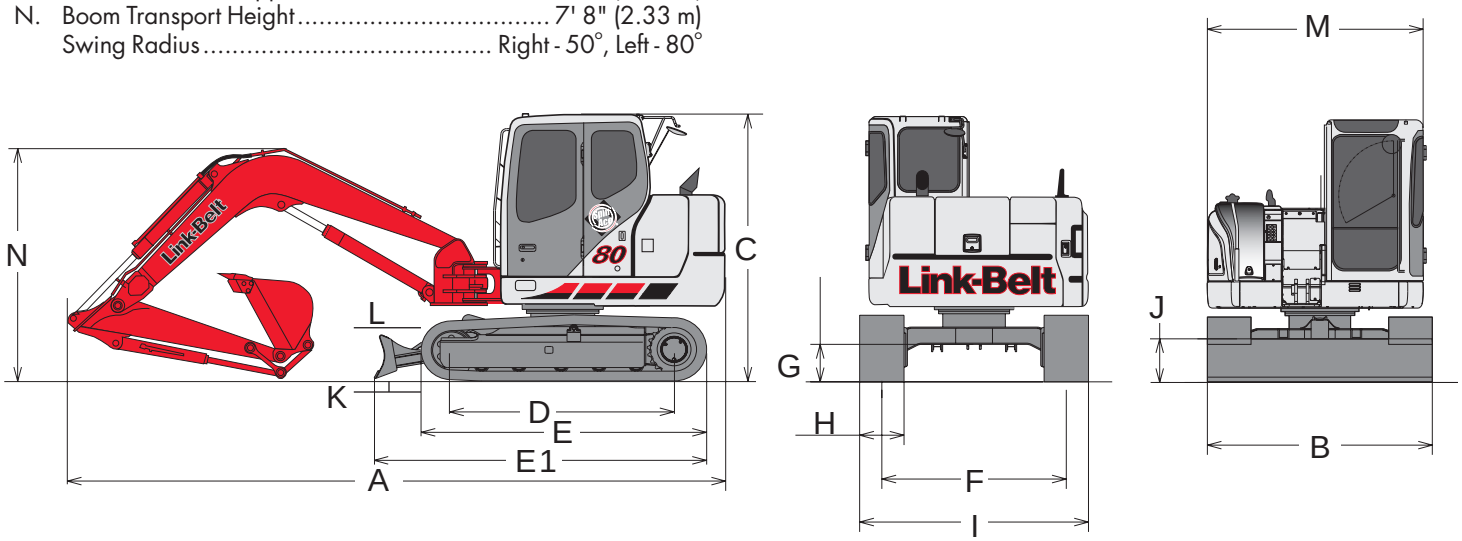

Standard Equipment

- Control pattern selector valve
- One-touch decelerator
- Integral cylinder cushioning
- Cushioned attachment
- Arm and Boom holding valve
- Auxiliary valve spool
- Travel alarm
- Low noise/low vibration cab floating on 4 fluid filled mounts
- Sliding/reclining, suspension cloth upholstered seat with adjustable arm rests and lumbar support, seat belt
- Analog gauge package
- Heater and air conditioner
- Rear view mirrors
- Two work lights, cab and boom
- Horn, interior lighting, AM/FM Stereo radio, clock, floor mat, cigarette lighter
- 12 volt accessory outlet for cell phones/ audio extras
- Safety glass windows with windshield wiper and washer
- Gate lock lever (hydraulic lockout device)
- Vandalism locks
- Common key for cab & house doors and engine hood
- Upper and lower undercovers
- 17.7" (450 mm) 3-bar grouser shoes
- 2,712 lb. (1 230 kg) Counterweight

Options

- Arms
  - 5' 7" (1.71 m)
  - 6' 11" (2.12 m)
- 23.6" (600 mm) 3-bar grouser shoes
- 17.7" (450 mm) rubber track (individual shoes bolting to standard rail)
- Auxiliary hydraulics
  - Single acting
  - Multi-function
  - Thumb
- Hose burst check valves
- Couplers (field install)
  - Esco multi-pin grabber
- Thumbs (field install)
  - Universal rigid
  - Hydraulic non-link
  - Hydraulic non-link (for coupler)
  - Hydraulic link

Link-Belt
EXCAVATORS · FORESTRY
DEMOLITION · MATERIAL HANDLING

LBX Company is the proud maker of quality Link-Belt excavators and is located in Lexington, KY.

LBX "Different by Design"
www.lbxco.com

Litho in USA 1/09 #LBX2158 (Supercedes LBX2138)

® LBX and ® Link-Belt are registered trademarks. Copyright 2009. All rights reserved. We are constantly improving our products and therefore reserve the right to change designs and specifications.